Circleg One

Transfemoral Cosmetic Cover

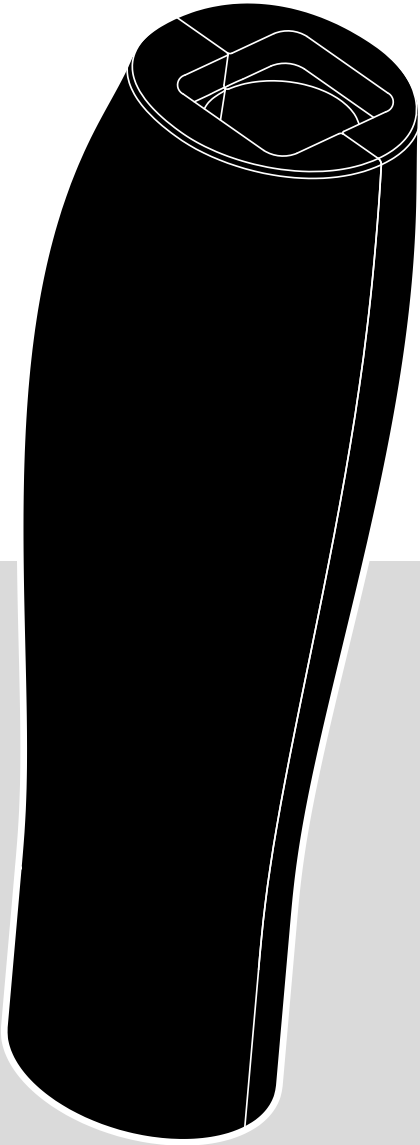

Instructions for Use - English

circleg

Circleg AG
Rautistrasse 30
8047 Zurich
Switzerland
www.circleg.world
support@circleg.world

Published
2026-09-15

Document Name
IFU-CC1-TF-EN V04 REV00

Table of content

1 Circleg product introduction **6**
1.1 General product description 6
1.2 Intended purpose 6
1.3 Intended user 6
1.4 Activity levels 6
1.5 Service life 6
1.6 Allowable conditions for storage and use 6
1.7 Unallowable conditions for storage and use 6
1.8 Overview of component 7
2 General safety instructions **8**
3 Adjustment guideline **10**
4 Maintenance **14**
4.1 Cleaning and care 14
5 Product complaints **14**
6 Liability **14**
7 Warranty **14**
8 Disposal **14**
9 Appendices **15**
9.1 Symbols Used 15

Welcome to the Circleg Instructions for Use!

This manual provides comprehensive instructions for certified Prosthetists on the proper use of the Circleg prosthetic components.

Please follow these **Instructions for Use** carefully to ensure optimal functionality and patient satisfaction.

→ Prior to utilizing the Circleg prosthetic components, please **review** this document carefully and take heed of all safety instructions provided herein.

→ Ensure that the amputee (prosthetic user, patient) receives comprehensive **training** on the safe and proper usage of the product.

→ In the event of any serious **incidents** related to the product, it is imperative that you promptly inform the service provider, Circleg and the relevant regulatory authority in your country. Especially if there is a noticeable deterioration in the prosthetic user's health. Your cooperation in this regard is essential to improve product safety.

→ It is advised to **retain** this document for your own records. It contains key information that may prove valuable in the future.

→ For further clarification or assistance, do not hesitate to **contact** our support team.

1 Circleg product introduction

1.1 General product description
The Circleg prosthesis is a mechanical device for lower limb replacement, consisting of modular components (Polycentric Knee, Pylon, Cosmetic Cover, and Dynamic Foot) that can be used together or individually. These components connect to a custom-fitted socket (not provided by Circleg) via a standard pyramid adapter.

1.2 Intended purpose
The intended purpose of the Circleg prosthesis, designed for both transtibial and transfemoral amputees, is to restore functional mobility by replicating the mechanical movements of a natural limb. This prosthetic device aims to enable amputees to perform daily activities with increased stability, control, and comfort.

1.3 Intended user
Amputees: The Circleg prosthesis shall be used by amputees (prosthetic user, patient) with sufficient physical and mental health to perform daily activities. It accommodates prosthetic users with heights ranging from 150cm to 190cm and weights from 40kg to 110kg.

Certified Prosthetists: The Circleg prosthesis will be customized, fitted, and maintained according to individual patient needs by certified healthcare professionals and Prosthetists.

1.4 Activity levels
The Circleg prosthesis is intended for prosthetic users with activity level K1 (limited and unlimited household ambulator), K2 (limited community ambulator) and K3 (unrestricted outdoor walker). The contraindicated activities must be taken into consideration during the usage (as outlined in section 2).

1.5 Service life
The Circleg prosthesis has an approved service life of 2 million cycles corresponding to 2 to 3 years of use, depending on the prosthetic user's level of activity. It is recommended to carry out regular safety checks (as outlined in section 4).

1.6 Allowable conditions for storage and use
The product shall be stored and used under the following conditions:

- → Environments where the temperature ranges from 0°C to +50°C.
- → Conditions where the relative humidity is between 20-90%.
- → Weatherproof design allows use in wet or humid environments; tolerates splashes of fresh water (e.g., rain).

1.7 Unallowable conditions for storage and use
The product shall not be exposed to the following conditions:

- → Environments involving continuous or prolonged contact with sun, dust and sand.
- → Continuous exposure to liquid media, including fresh water.
- → Exposure to salt water, acids, and urine.

1.8 Overview of component

1 TF Cosmetic Cover S/M (CC1-TF-SM-KIT)
2 TF Cosmetic Cover M/L (CC1-TF-ML-KIT)

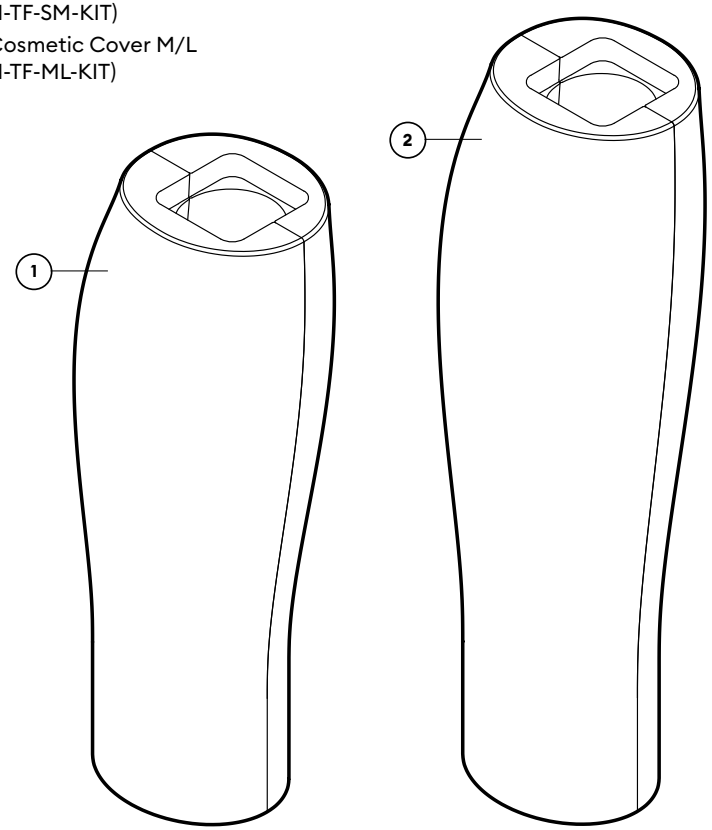

The Transfemoral Cosmetic Cover, available in two sizes (small/medium & medium/large), gives the Circleg prosthesis its distinctive look, providing a natural leg shape and robust protection. Made from lightweight, impact-, water-, and chemical-resistant material, it can be adjusted in length and shape to fit each user. Size SM is suited for individuals up to 170 cm, while size ML fits those up to 190 cm. The cover also serves as an ideal base for custom leather or textile wraps. With its easy clamp system, it can be fitted quickly, reducing the labour time needed for a polished finish.

Article Number	CC1-TF-SM-KIT	CC1-TF-ML-KIT
Component Length	250 - 310 mm	310 - 370 mm
Component Weight	129 g	151 g
Prosthetic User Height	150 - 170 cm	170 - 190 cm

2 General safety instructions

Follow the safety instructions below when using Circleg prosthetics and inform the prosthetic user of the potential consequences. Using the product without following these instructions may cause injury or harm to the prosthetic user and/or damage the product:

Trained Prosthetist requirement
Circleg prosthetic components shall be fitted by trained and certified Prosthetists only.

Contraindicated activities
Do not use Circleg components for activities outside their scope or contraindications, such as:

- → Pediatric prosthetic users
- → Prosthetic users shorter than 150cm or taller than 190cm
- → Prosthetic users weighing less than 40 kg or more than 110kg
- → Prosthetic users with foot sizes smaller than 21cm or larger than 30cm
- → Sports activities
- → Kneeling or squatting

Combination with third-party components
Functionality with components from other manufacturers that feature compatible modular connectors has not been tested. Therefore, using Circleg components with third-party parts is not recommended, except for the socket connected to the residual limb. The selection of an appropriate socket solution should consider factors such as amputation level, activity level, and personal preferences of the prosthetic user. It is the responsibility of the service provider and the certified Prosthetist to assess and determine the most suitable solution.

Counterfeit, beyond end-of-life, or reused components
Do not use counterfeit or reused Circleg components. Always inspect components before use, ensuring they are within their defined lifespan, and instruct prosthetic users not to use components beyond their end-of-life (as outlined in section 1.4 and 1.5). Take suitable measures as outlined in section 4 (e.g. cleaning, repair, replacement by trained and certified Prosthetists).

Unallowable conditions
Do not use or expose Circleg components to environmental conditions other than those specified in this instruction (as outlined in section 1.6 and 1.7).

Fire safety
Circleg components meet the flame resistance requirements outlined in FMVSS 302 / DIN 75200. However, they may still ignite if exposed to improper or negligent fire handling. To ensure safety, keep them away from all ignition sources, including open flames and lit cigarettes.

Notes

3 Adjustment guideline

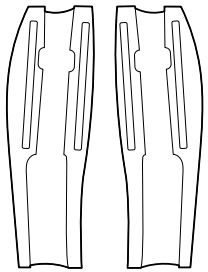

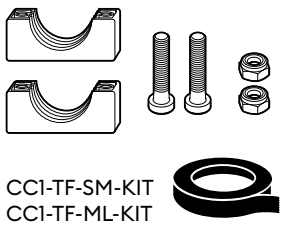

Tools needed

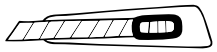

Cutter

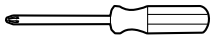

Screw driver
cross-head PZ3

1 Cut the cover to have a 10mm gap between the foot and cover.

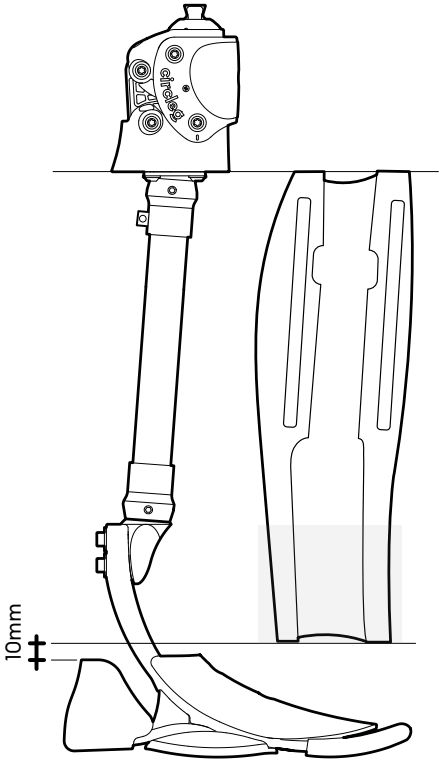

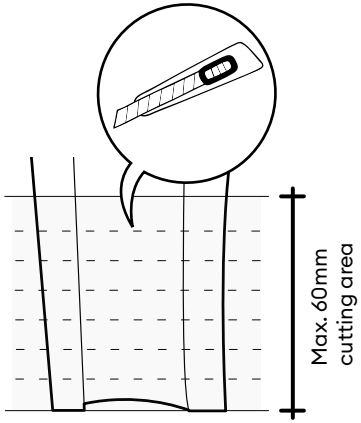

2 Mount the bracket 60mm below the prosthetic knee.

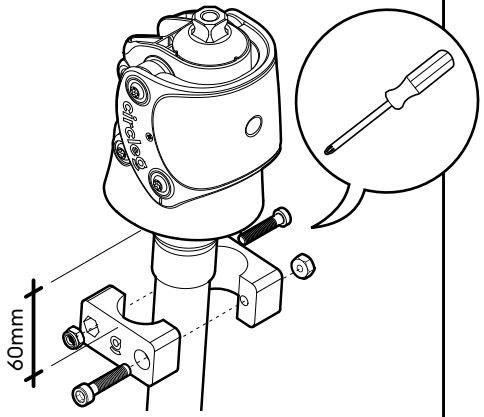

3 Apply a few dots of glue* to the inside of the cover and click the two halves together.

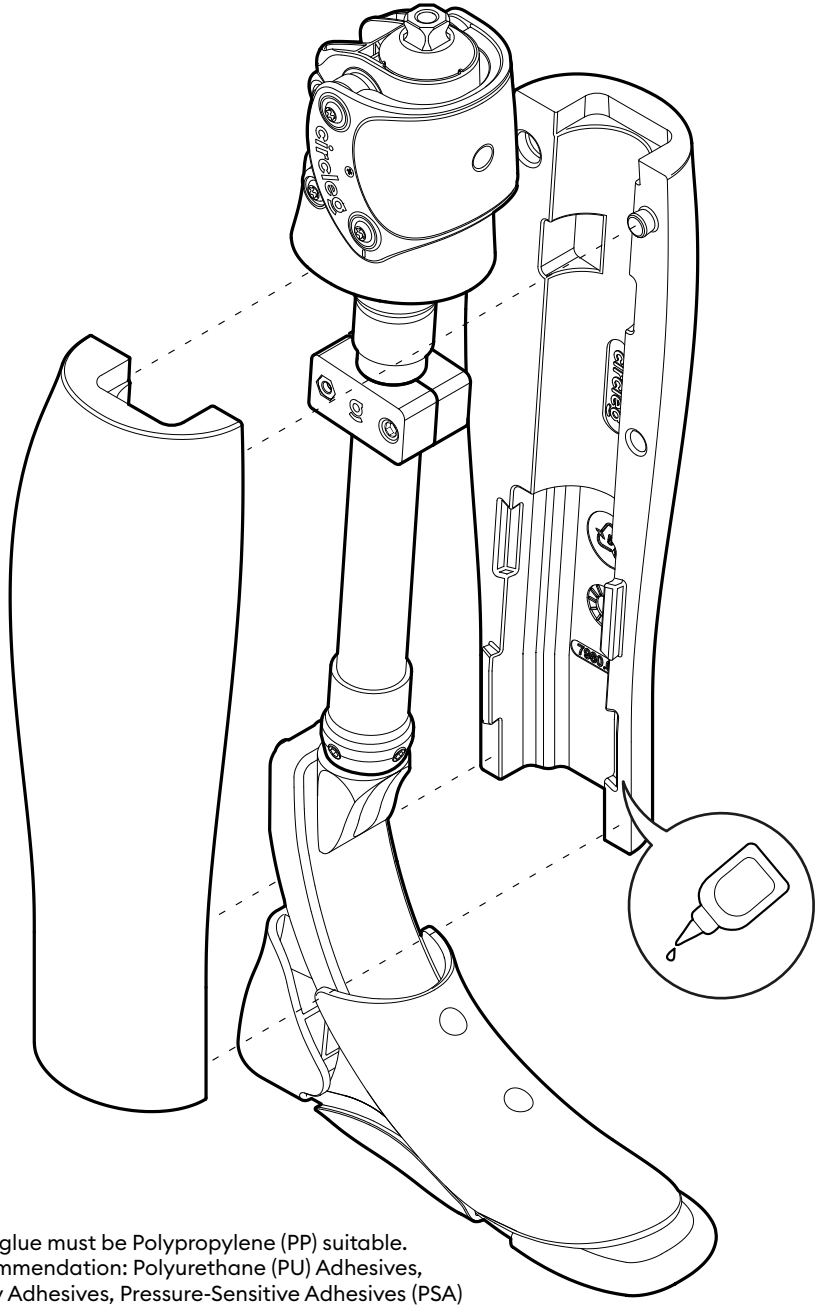

* The glue must be Polypropylene (PP) suitable.
Recommendation: Polyurethane (PU) Adhesives, Epoxy Adhesives, Pressure-Sensitive Adhesives (PSA)

4 Secure the two cover halves with additional tape in the upper and lower sections.

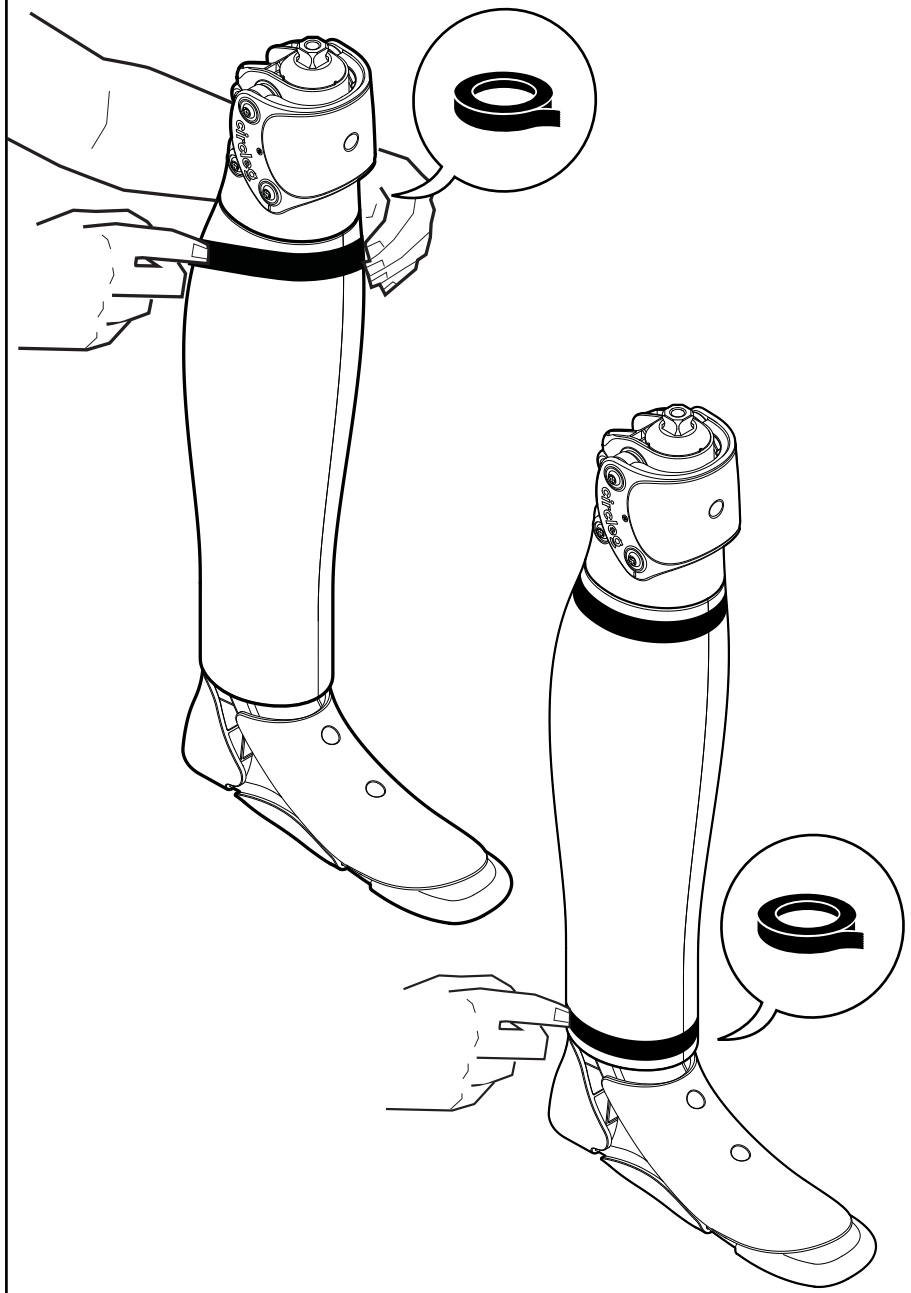

5 Hand the cover tape to the prosthetic user to take home.

4 Maintenance

The Circleg components are designed for low maintenance. It is recommended to visually inspect the component after the initial 30 days of use, and subsequently at intervals of every 6 months. This proactive approach helps to identify and prevent any signs of unusual wear or potential issues that may arise over time. Scheduling of regular maintenance lies within the discretion of the service provider. The prosthetic user shall discontinue use and report to the service provider in the event of any breakage, failure, change in function, or any unusual wear.

4.1 Cleaning and care

Clean the Circleg components with fresh water and a microfiber cloth only. Dry with a soft towel thoroughly and allow the component to air dry to remove any remaining moisture. Repeat this procedure regularly - especially after exposure to substances other than fresh water. Avoid strong acids or any other chemical cleaning agents (pH=4 or less) on the component. These substances can be harmful and may cause damage to the Circleg components.

5 Product complaints

In the event of any serious incidents related to the product, it is imperative that you promptly inform the service provider, Circleg and the relevant regulatory authority in your country. Especially if there is a noticeable deterioration in the prosthetic user's health. Your cooperation in this regard is essential to improve product safety.

6 Liability

Circleg will only accept responsibility if the product is used in strict accordance with the descriptions and instructions outlined in this document. Circleg will not be held responsible for any damages resulting from the disregard of the information contained in this document, especially in cases of improper usage or unauthorized modifications to the product.

7 Warranty

The warranty for this product is subject to Circleg's General Terms and Conditions in effect at the time of sale. Details regarding the scope, duration, and conditions of the warranty can be found in the applicable General Terms and Conditions, available upon request or on the Circleg website: www.circleg.world

8 Disposal

Prosthetic users are advised to return defective or worn-out products to their service provider. Please note that disposal of this product with regular domestic waste may not be permitted in all countries of use. Not following the disposal regulations of the responsible authorities may have a detrimental impact on health and environment.

9 Appendices

9.1 Symbols Used

Manufacturer	Temperature limits
Date of manufacture	Keep away from sunlight
Importer	Humidity limits
Distributor	
Packaging unit	
Caution	
Operator's manual; operating instructions	
Declaration of conformity according to the applicable European regulation	
SN	Serial number (SYYCW-REF-NNN-X) S - Series YY - Year CW - Calendar week REF - Catalogue number NNN - Sequential number X - Material ID (where applicable)
REF	Article number
MD	Medical device
EC REP	Local representative

Contact us in case of any assistance needed at support@circleg.world