Circleg One

Dynamic Foot

Instructions for Use - English

circleg

Circleg AG
Rautistrasse 30
8047 Zurich
Switzerland
www.circleg.world
support@circleg.world

Published
2026-10-14

Document Name
IFU-F1SML-EN V04 REV00

Table of content

1 Circleg product introduction 6
1.1 General product description 6
1.2 Intended purpose 6
1.3 Intended user 6
1.4 Activity levels 6
1.5 Service life 6
1.6 Allowable conditions for storage and use 6
1.7 Unallowable conditions for storage and use 6
1.8 Overview of component 7
2 General safety instructions 8
3 Preparing the product for use 10
3.1 How to choose the correct foot category 10
3.2 How to adjust the size of the foot 12
3.3 How to adjust and mount the foot cover 14
4 Alignment guidelines 16
4.1 TF[1] Bench alignment 16
4.2 TT[2] Bench alignment 18
4.3 Mounting of the Sole Pad 20
4.4 TF[1] Static alignment 22
4.5 TF[1] Dynamic alignment 22
4.6 TT[2] Static alignment 24
4.7 TT[2] Dynamic alignment 24
5 Cover 26
5.1 How to add and adjust the cover 26
6 Maintenance 29
6.1 Cleaning and care 29
7 Product complaints 29
8 Liability 29
9 Warranty 29
10 Disposal 29
11 Appendices 31
11.1 Symbols used 31

[1] TF: transfemoral or above-knee
[2] TT: transtibial or below-knee

Welcome to the Circleg Instructions for Use!

This manual provides comprehensive instructions for certified Prosthetists on the proper use of the Circleg prosthetic components.

Please follow these **Instructions for Use** carefully to ensure optimal functionality and patient satisfaction.

→ Prior to utilizing the Circleg prosthetic components, please **review** this document carefully and take heed of all safety instructions provided herein.

→ Ensure that the amputee (prosthetic user, patient) receives comprehensive **training** on the safe and proper usage of the product.

→ In the event of any serious **incidents** related to the product, it is imperative that you promptly inform the service provider, Circleg and the relevant regulatory authority in your country. Especially if there is a noticeable deterioration in the prosthetic user's health. Your cooperation in this regard is essential to improve product safety.

→ It is advised to **retain** this document for your own records. It contains key information that may prove valuable in the future.

→ For further clarification or assistance, do not hesitate to **contact** our support team.

1 Circleg product introduction

1.1 General product description
The Circleg prosthesis is a mechanical device for lower limb replacement, consisting of modular components (Polycentric Knee, Pylon, Cosmetic Cover, and Dynamic Foot) that can be used together or individually. These components connect to a custom-fitted socket (not provided by Circleg) via a standard pyramid adapter.

1.2 Intended purpose
The intended purpose of the Circleg prosthesis, designed for both transtibial and transfemoral amputees, is to restore functional mobility by replicating the mechanical movements of a natural limb. This prosthetic device aims to enable amputees to perform daily activities with increased stability, control, and comfort.

1.3 Intended user
Amputees: The Circleg prosthesis shall be used by amputees (prosthetic user, patient) with sufficient physical and mental health to perform daily activities. It accommodates prosthetic users with heights ranging from 150cm to 190cm and weights from 40kg to 110kg.

Certified Prosthetists: The Circleg prosthesis will be customized, fitted, and maintained according to individual patient needs by certified healthcare professionals and Prosthetists.

1.4 Activity levels
The Circleg prosthesis is intended for prosthetic users with activity level K1 (limited and unlimited household ambulator), K2 (limited community ambulator) and K3 (unrestricted outdoor walker). The contraindicated activities must be taken into consideration during the usage (as outlined in section 2).

1.5 Service life
The Circleg prosthesis has an approved service life of 2 million cycles corresponding to 2 to 3 years of use, depending on the prosthetic user's level of activity. It is recommended to carry out regular safety checks (as outlined in section 6).

1.6 Allowable conditions for storage and use
The product shall be stored and used under the following conditions:

- → Environments where the temperature ranges from 0°C to +50°C.
- → Conditions where the relative humidity is between 20-90%.
- → Weatherproof design allows use in wet or humid environments; tolerates splashes of fresh water (e.g., rain).

1.7 Unallowable conditions for storage and use
The product shall not be exposed to the following conditions:

- → Environments involving continuous or prolonged contact with sun, dust and sand.
- → Continuous exposure to liquid media, including fresh water.
- → Exposure to salt water, acids, and urine.

1.8 Overview of component

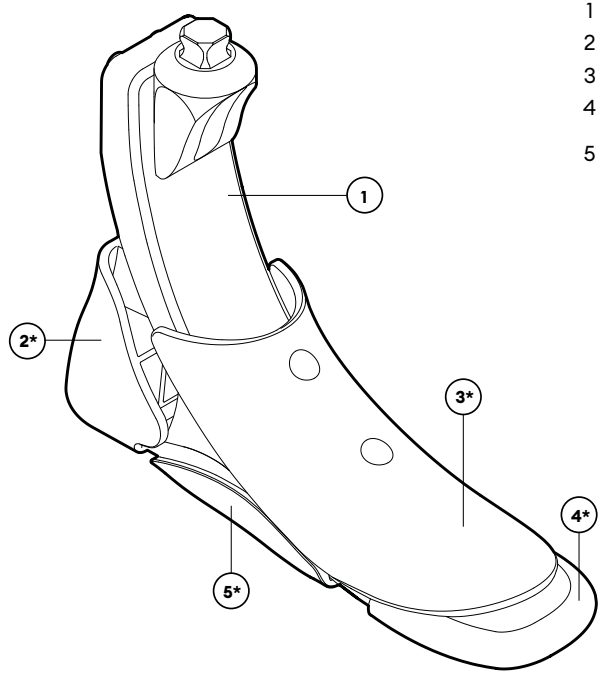

1 Foot (F1-S/M/L)
2 Heel Cover (HFC1)
3 Instep Cover (IFC1)
4 Toe Cover (TFC1)
5 Sole Pad (ROF1-S/M/L)

* Parts subject to normal wear

The Circleg dynamic foot is designed for active adult prosthetic users with increased durability and desired roll-over behaviour. The foot is easily adjustable to the user's foot size and can be used for both left and right side. The foot allows the fitting of transfemoral and transtibial prosthetic users with an amputation of at least 23 cm from the ground and a residual stump of at least 10 cm. The foot is equipped with covers that provide a more natural shape while increasing stability in the shoe. The covers are made of polyurethane and positioned in the front, back and middle of the foot.

Article Number	F1-S/M/L-KIT
Activity Level	K1, K2, K3
Foot Size (see size chart p. 10)	21 - 30 cm
Foot Side	left & right
Max. Body Weight (S/M/L) (see size chart p. 10)	P3 - 70kg / P4 - 90kg / P5 - 110kg
Component Weight (S/M/L)	915g / 1030g / 1125g
Component Height	20 cm

2 General safety instructions

Follow the safety instructions below when using Circleg prosthetics and inform the prosthetic user of the potential consequences. Using the product without following these instructions may cause injury or harm to the prosthetic user and/or damage the product:

Trained Prosthetist requirement
Circleg prosthetic components shall be fitted by trained and certified Prosthetists only.

Contraindicated activities
Do not use Circleg components for activities outside their scope or contraindications, such as:

- → Pediatric prosthetic users
- → Prosthetic users shorter than 150cm or taller than 190cm
- → Prosthetic users weighing less than 40 kg or more than 110kg
- → Prosthetic users with foot sizes smaller than 21cm or larger than 30cm
- → Sports activities
- → Kneeling or squatting

Combination with third-party components
Functionality with components from other manufacturers that feature compatible modular connectors has not been tested. Therefore, using Circleg components with third-party parts is not recommended, except for the socket connected to the residual limb. The selection of an appropriate socket solution should consider factors such as amputation level, activity level, and personal preferences of the prosthetic user. It is the responsibility of the service provider and the certified Prosthetist to assess and determine the most suitable solution.

Counterfeit, beyond end-of-life, or reused components
Do not use counterfeit or reused Circleg components. Always inspect components before use, ensuring they are within their defined lifespan, and instruct prosthetic users not to use components beyond their end-of-life (as outlined in section 1.4 and 1.5). Take suitable measures as outlined in section 6 (e.g. cleaning, repair, replacement by trained and certified Prosthetists).

Unallowable conditions
Do not use or expose Circleg components to environmental conditions other than those specified in this instruction (as outlined in section 1.6 and 1.7).

Fire safety
Circleg components meet the flame resistance requirements outlined in FMVSS 302 / DIN 75200. However, they may still ignite if exposed to improper or negligent fire handling. To ensure safety, keep them away from all ignition sources, including open flames and lit cigarettes.

Notes

3 Preparing the product for use

3.1 How to choose the correct foot category

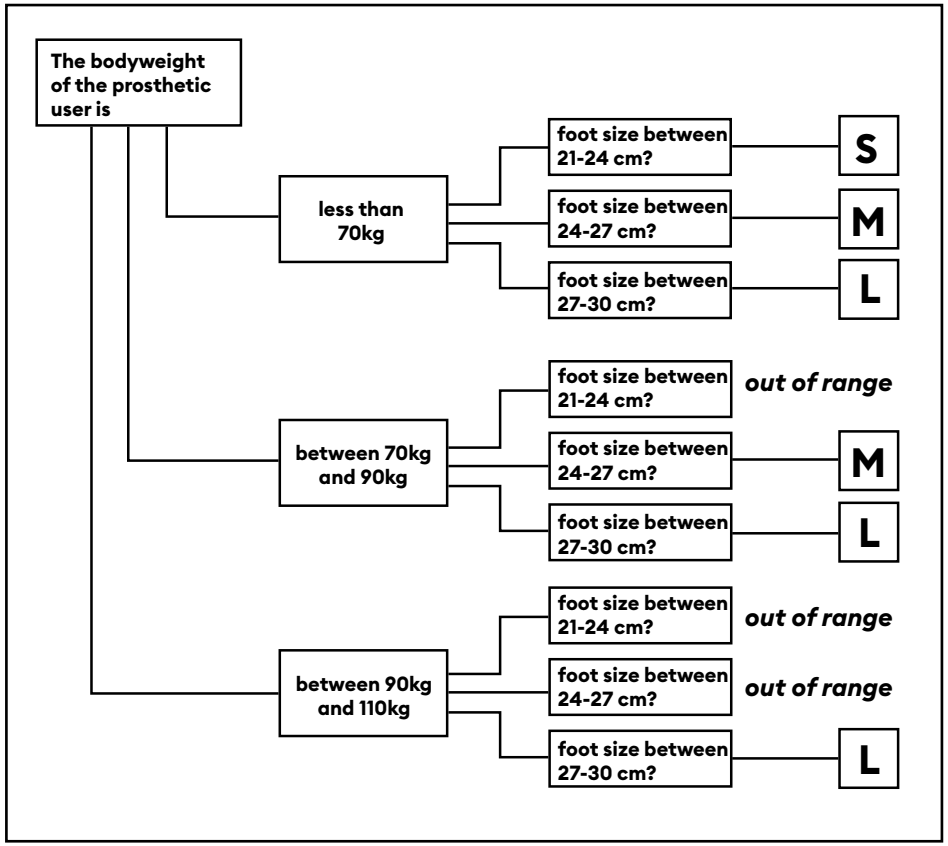

Body weight (kg)	Foot size (cm)									
	21	22	23	24	25	26	27	28	29	30
< 70	S	S	S	S / M	M	M	M / L	L	L	L
70 – 90				M	M	M	M / L	L	L	L
90 – 110							L	L	L	L

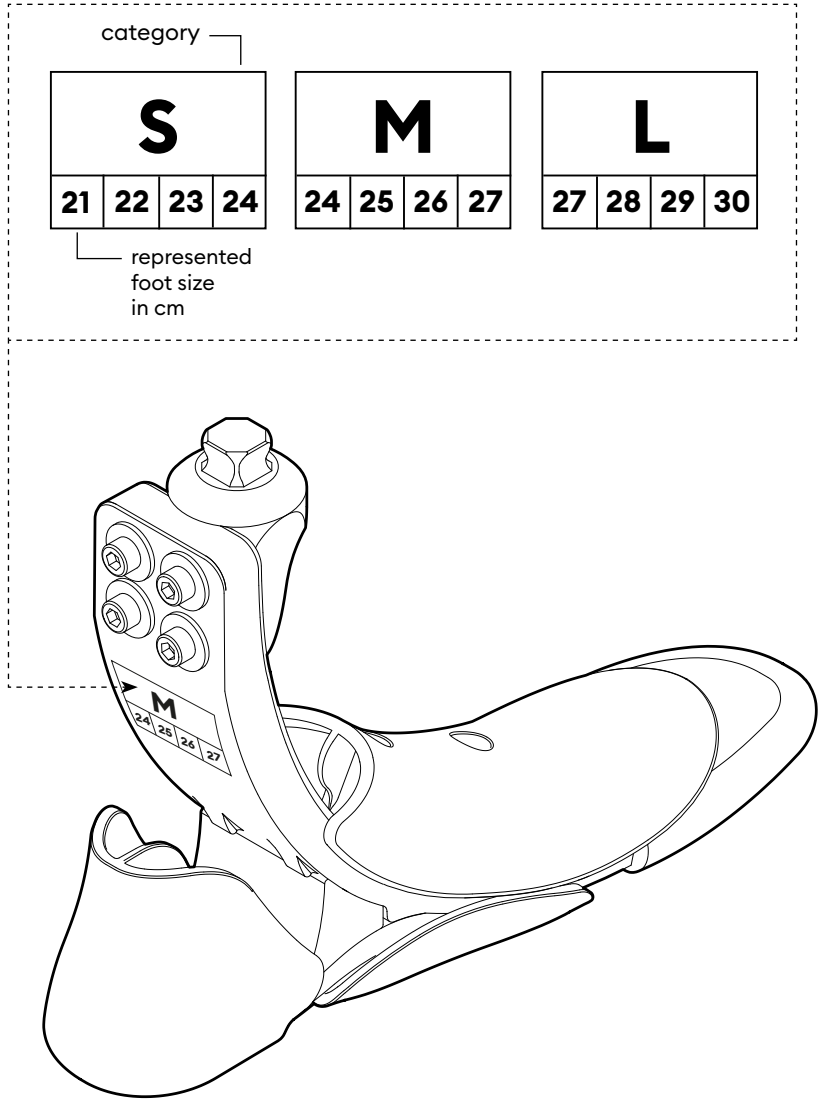

3.2 How to adjust the size of the foot

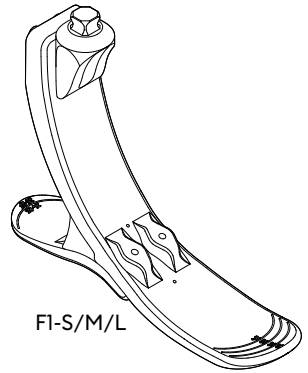

F1-S/M/L

Tools needed

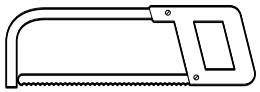

Metal saw

Hand rasp

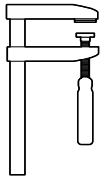

2x Screw clamp

1 Mount the foot forwards to the workbench using two screw clamps.

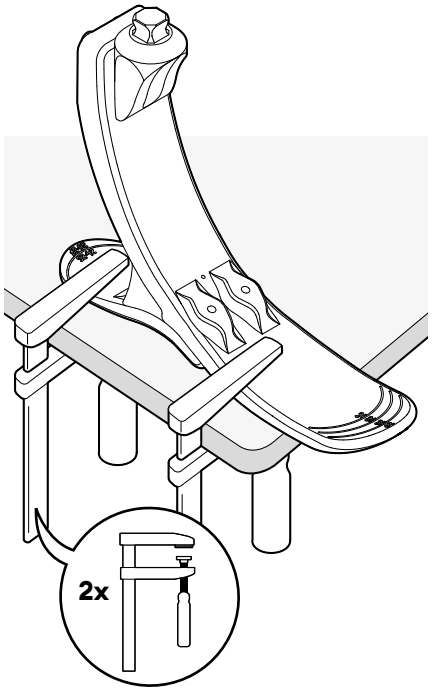

2 Cut the foot front according to the size line and user's foot size.

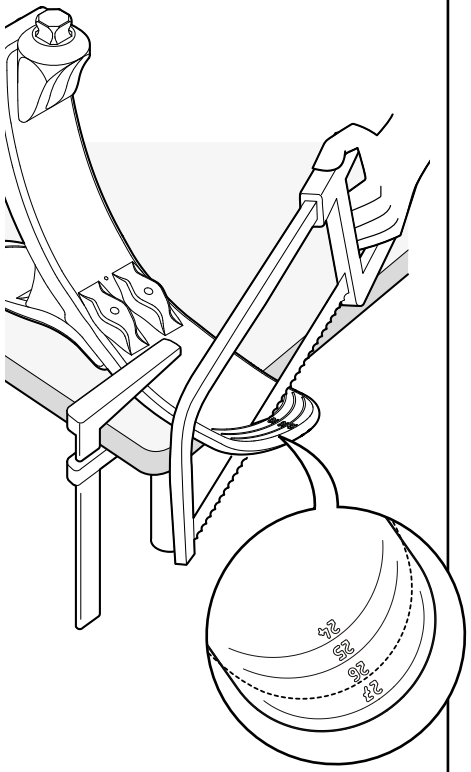

3 Mount the foot backwards to the workbench using two screw clamps.

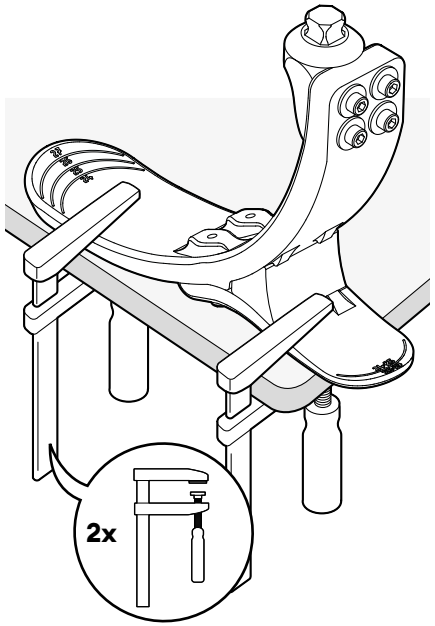

4 Cut the foot heel according to the size line and user's foot size.

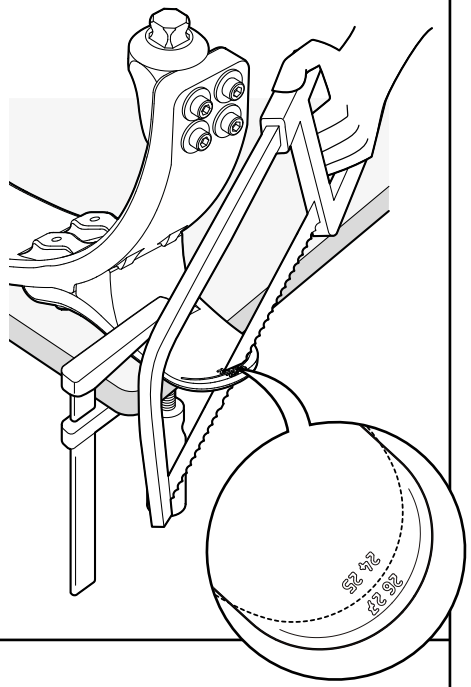

5 Grind the cuts (front and heel) round with a hand rasp.

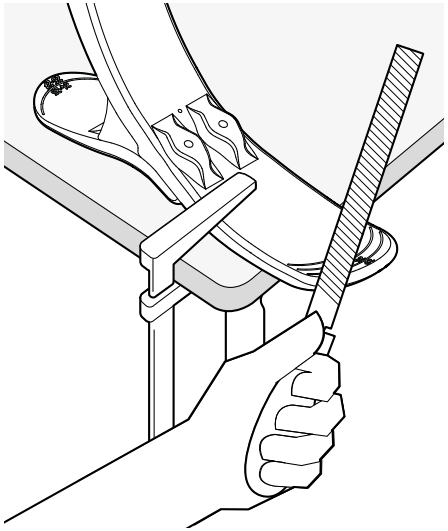

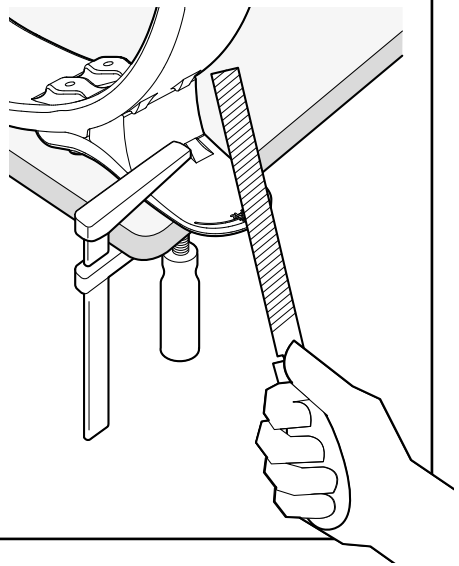

3.3 How to adjust and mount the foot cover

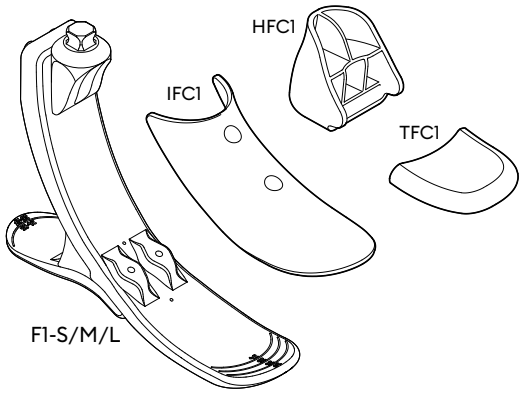

Tools needed

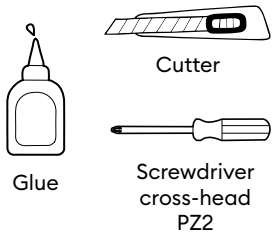

1 Cut the instep cover (IFC1) according to the size line and user's foot category.

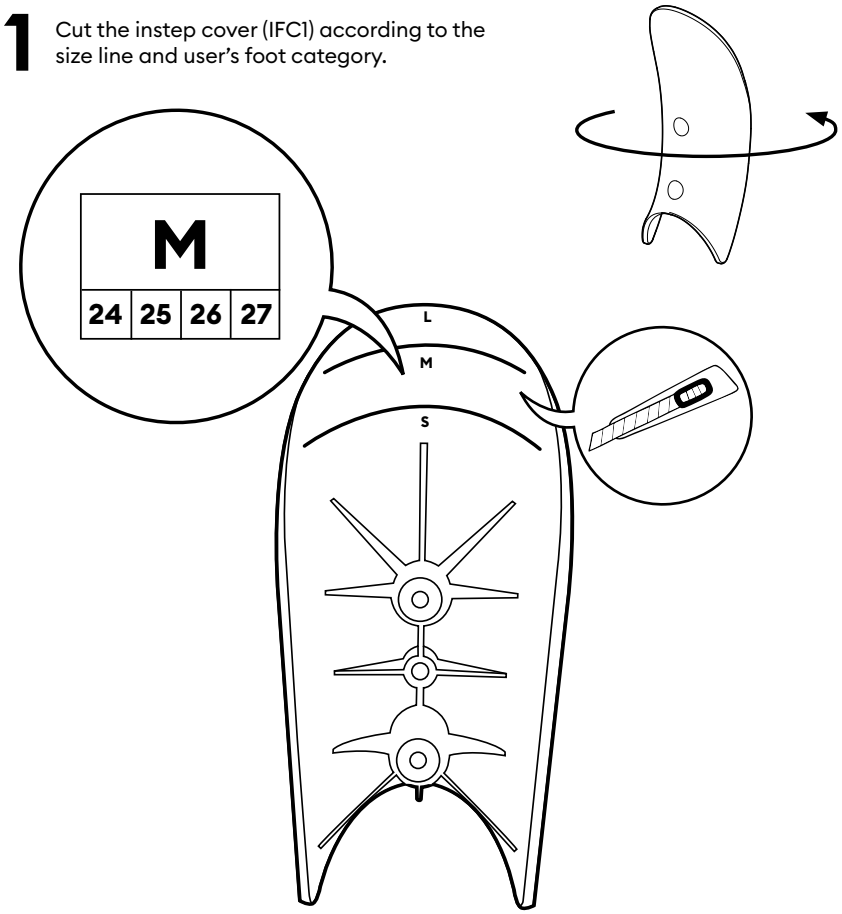

2 Mount the instep cover (IFC1) with a screw driver. Apply glue* to the front and heel part of the foot and put the front (TFC1) and heel (HFC1) cover on it.

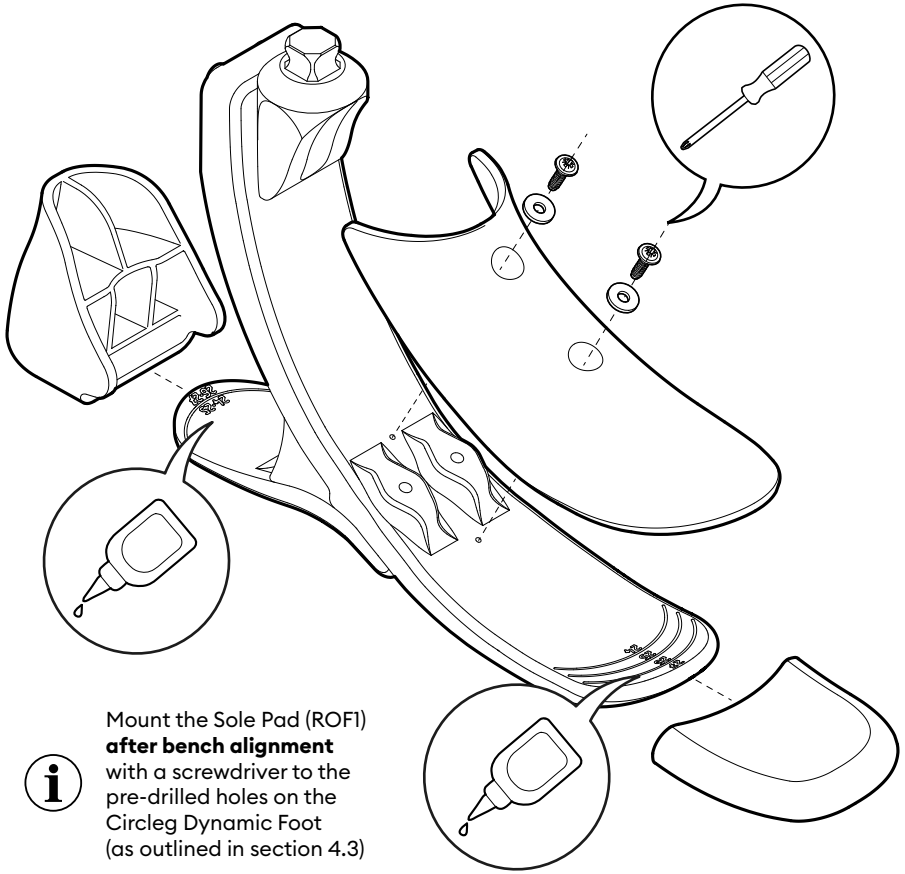

Mount the Sole Pad (ROF1) **after bench alignment** with a screwdriver to the pre-drilled holes on the Circleg Dynamic Foot (as outlined in section 4.3)

* The glue must be TPU and PP suitable. Recommendation: Modified Acrylic Adhesives, Cyanoacrylate Adhesives (Super Glue), Silicone Adhesives

Always use the Circleg foot in combination with the Circleg cover(s)

4 Alignment guidelines

4.1 TF[1] Bench alignment

To benefit from the functional features of the Circleg components in the best way, the bench alignment should be done as follows:

1 Position the middle of the foot 30mm anterior to the alignment line.

2 Set correct outward rotation of the foot (approx. 5°) and add 5mm to the required heel height.

3 Make sure the Circleg knee is positioned correctly (TOP sign arrow needs to face upwards) and the alignment reference point (anterior lower axis) is positioned on the alignment line. Be aware of the outward rotation of the knee (approx. 5°). Recommended Knee Center (KC) height reference point (anterior upper axis); 20mm proximal to the medial tibial plateau.

4 Cut a pylon according to the height of the prosthetic user and use it to connect the foot to the knee joint with adapters.

5a Mark the centre of the socket proximal on the lateral side.

5b Mark the centre of the socket distal on the lateral side. Draw a line through both the marks from the socket brim to the distal end of the socket. Transfer Height of IT to lateral wall and make a mark 30mm proximal on vertical line just drawn. This is the rotation point for flexion angle of socket.

6 From proximal rotation point draw socket flexion angle onto socket (In addition to the prosthetic user's hip flexion contracture, add 3-5 degrees more flexion). Ensure you take the individual situation into consideration.

7 Connect the socket and the knee through an adapter, add loctite 222 or 243 to A screws and tighten the A screws with 15 Nm and the B screws with 5 Nm.

[1] TF: transfemoral or above-knee

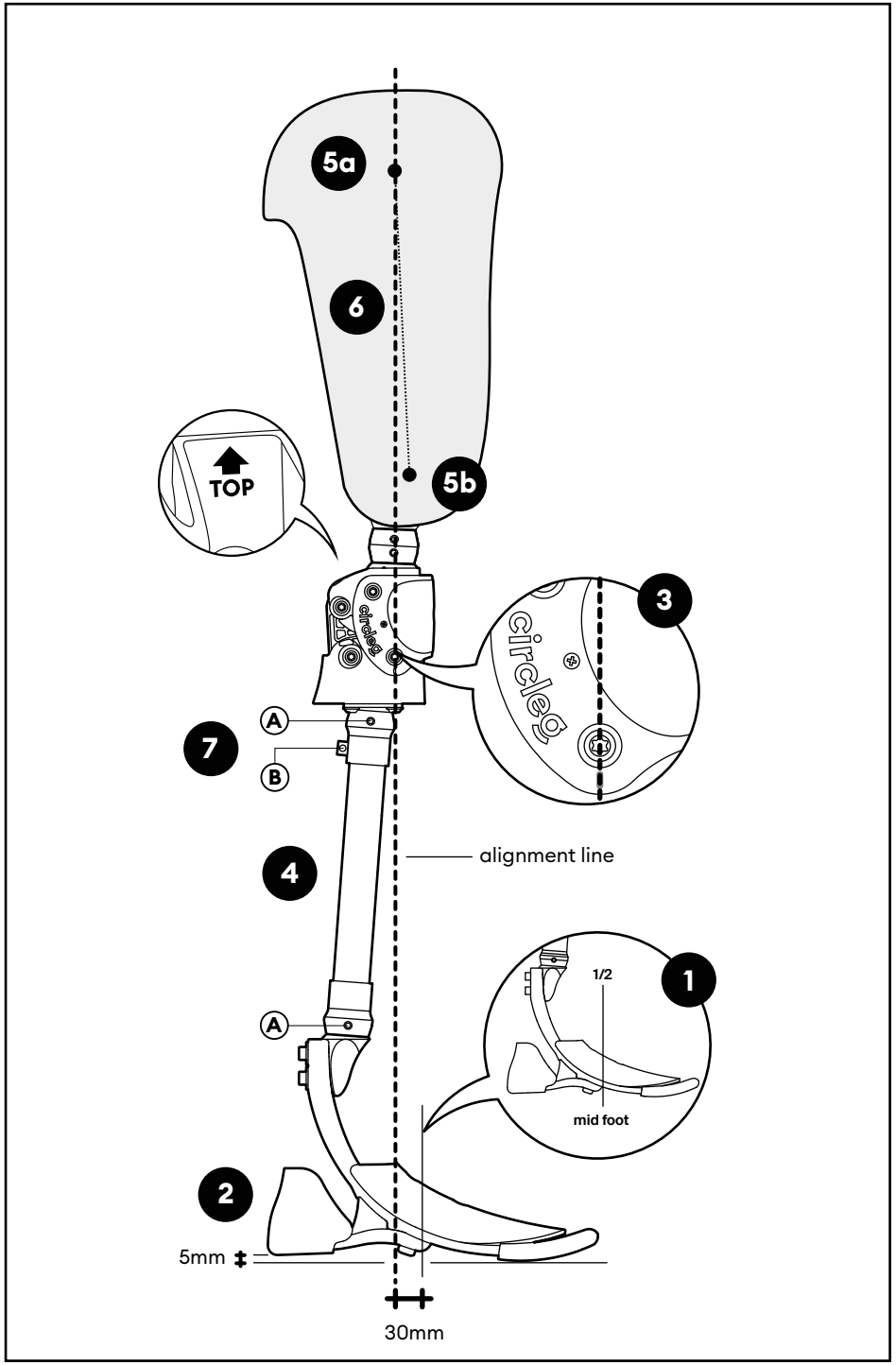

4.2 TT[2] Bench alignment

To benefit from the functional features of the Circleg components in the best way, the bench alignment should be done as follows:

1. Position the middle of the foot 30mm anterior to the alignment line.
2. Set correct outward rotation of the foot (approx. 5°) and add 5mm to the required heel height.
3. Cut a pylon according to the height of the prosthetic user and connect the foot to the socket with the proper adapters.

4a. Mark the centre of the socket proximal on the lateral side.

4b. Mark the centre of the socket distal on the lateral side. Draw a line through both the marks from the socket brim to the distal end of the socket.

5. Position the prosthetic socket in a way that the center (1/2) point is on the alignment reference line, with the socket set at the appropriate flexion angle.
6. Add loctite 222 or 243 to A screws and tighten the A screws with 15 Nm and the B screws with 5 Nm.

[2] TT: transtibial or below-knee

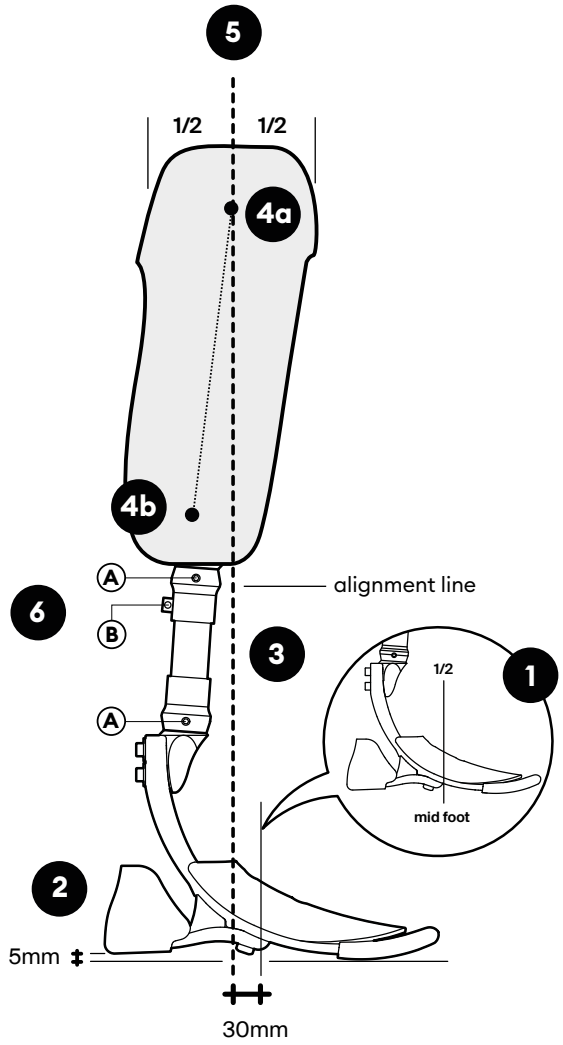

4.3 Mounting of the Sole Pad

→ **The Sole Pad (ROF1-S/M/L) is an optional accessory for the Circleg Dynamic Foot**, designed to significantly enhance walking comfort. It promotes a smoother foot roll-over, enabling a more natural and effortless gait.

→ **The Sole Pad is available in three sizes (S, M, L) to fit all Circleg foot sizes.** It is securely mounted using countersunk screws, minimizing mechanical wear on socks and shoes.

→ **The assembly and alignment of the Sole Pad must be carried out by a certified Prosthetist to ensure optimal performance.** It is essential to follow the provided Instructions for Use to achieve the best functionality and maximize patient satisfaction.

For complete instructions on selecting the appropriate Circleg Dynamic Foot and ensuring proper fitting, refer to the instruction manual IFU-F1SML.

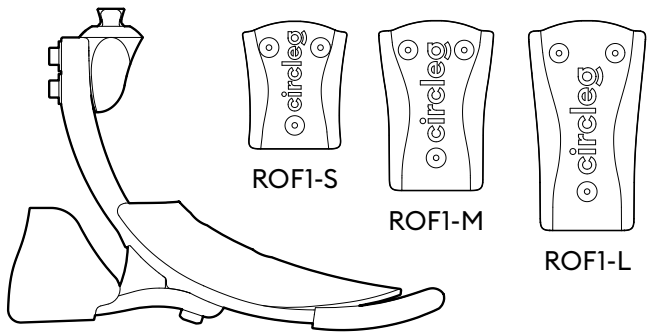

Tool needed

Screwdriver cross-head PZ2

Mount the Sole Pad (ROF1) **after bench alignment** with a screwdriver to the pre-drilled holes on the Circleg Dynamic Foot.

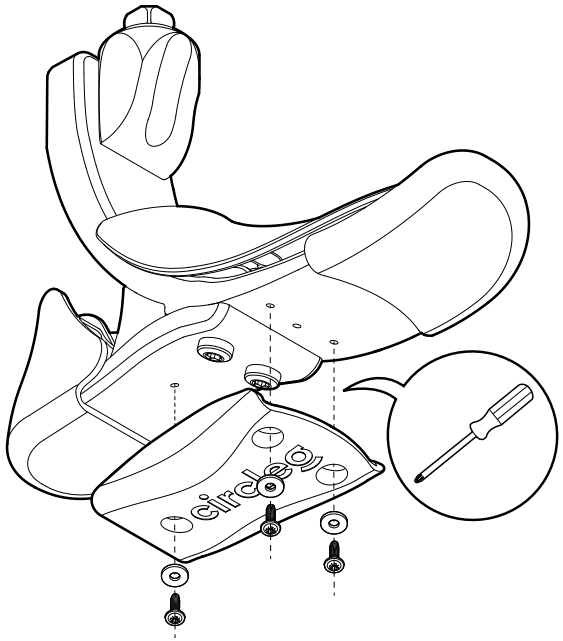

If necessary, make fine adjustments to the prosthetic alignment and/or adjust the prosthetic leg length.

The Sole Pad (ROF1-S/M/L) is an optional add-on for the Circleg Dynamic Foot. If the prosthetic user finds it uncomfortable, it can be easily removed by a certified Prosthetist the same way it was attached.

4.4 TF[1] Static alignment

After bench alignment, the static alignment is made to ensure appropriate stability and easy swing phase initiation. To ensure proper static alignment, the user should be standing upright with both feet flat on the ground, distributing their weight evenly across both legs. For added safety during the alignment check, it is advised to perform the procedure while the user is positioned between parallel bars.

Please follow the steps below:

1. To make the load line visible either use a L.A.S.A.R.*, laser or pendulum. The prosthetic user should stand upright with shoes on both feet, ensuring that at least 1/3 of their body weight is borne by the prosthetic side.

2. As a second step adapt the alignment by only adjusting the plantar flexion of the foot. The load line / laser line should be placed anterior to the alignment reference point of the Circleg knee with a distance of approx. 10 mm.

3. Now, engage in dynamic optimization while conducting trial walking. Ensure to make any necessary adjustments based on the following factors:

   → Verify step length symmetry to determine the socket flexion position and the anterior-posterior positioning of the socket adapter to ensure socket-knee alignment is safe (in the sagittal plane).

   → Evaluate the adduction position of the socket and the medial-lateral positioning of the socket adapter (in the frontal plane).

   → Assess the rotation position of the knee joint axis and the outward rotation of the prosthetic foot (in the transversal plane).

4. Finally, make sure to document the optimal fitting.

4.5 TF[1] Dynamic alignment

The dynamic alignment aims to achieve the most suitable limb geometry for best function and comfort by using subjective judgment and feedback from the prosthetic user.
While observing the patient's gait between parallel bars, ensure a smooth transition from heel strike to toe-off. When standing upright, confirm that both the heel and toes are in contact with the ground and that the weight is distributed evenly.

*if you use a L.A.S.A.R., make sure to provide a height compensation plate for the prosthetic user to stand on.

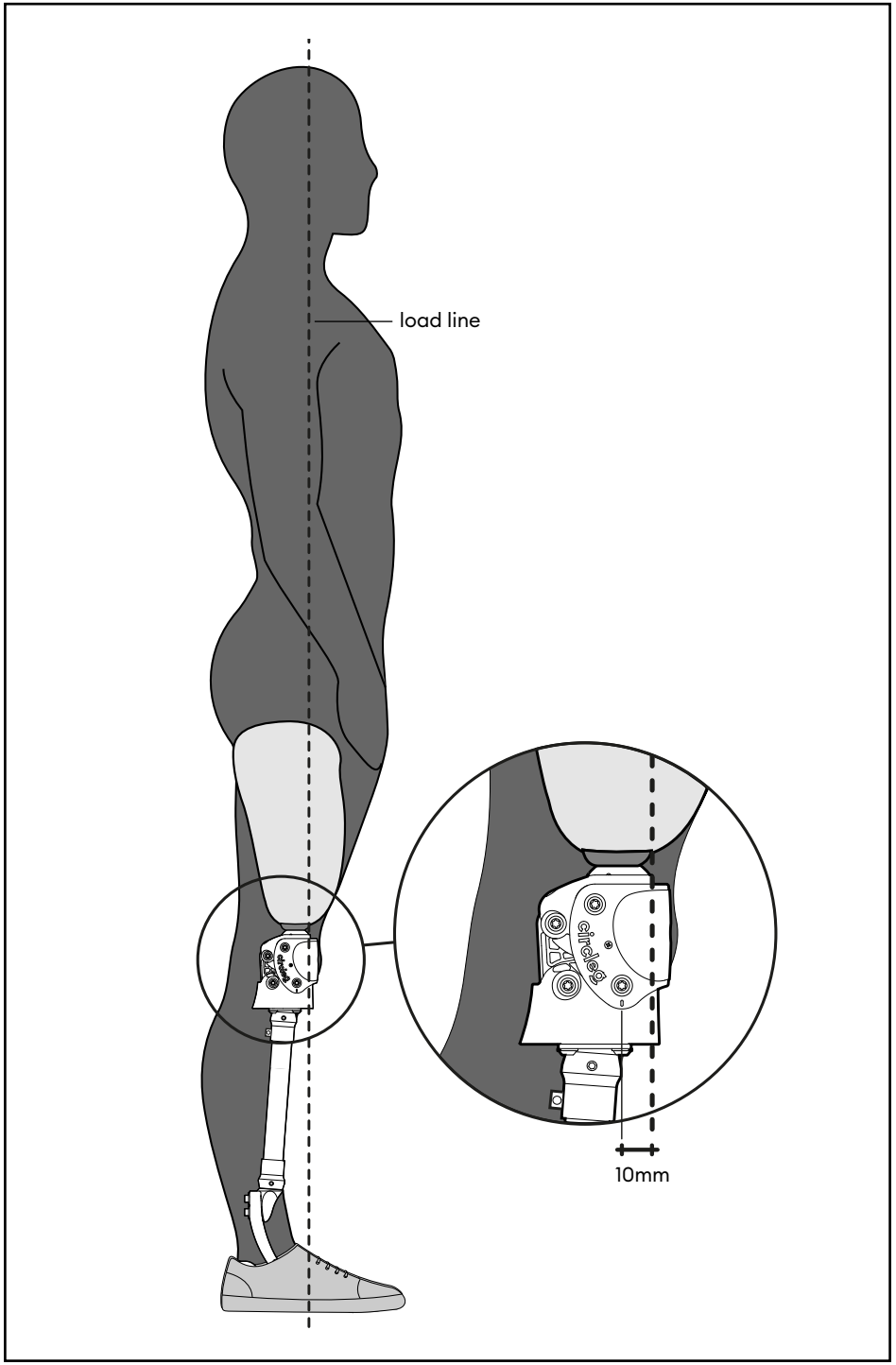

4.6 TT² Static alignment

In order to benefit from the functional features of the Circleg components in the best way the bench alignment should be done as follows:

1. **Sagittal plane**
   Verify the length of the prosthesis and determine the effective knee centre of rotation and mark it on the outside of the prosthetic socket.

2. Mark the prosthetic socket 15 mm in front of the effective knee centre.

3. Through plantar flexion of the prosthetic foot, the load line is moved to the «15 mm mark» on the socket (alignment line).

4. **Frontal plane**
   Through mediolateral shifting and pronation/supination of the prosthetic foot, the alignment line (laser, pendulum) should pass through the centre of the prosthetic foot.

5. On the socket, the load line should run along the lateral patella edge.

4.7 TT² Dynamic alignment

The dynamic alignment aims to achieve the most suitable limb geometry for best function and comfort by using subjective judgment and feedback from the prosthetic user.
While observing the patient's gait between parallel bars, ensure a smooth transition from heel strike to toe-off. When standing upright, confirm that both the heel and toes are in contact with the ground and that the weight is distributed evenly. For transtibial amputees, verify that physiological knee flexion is achieved during the stance phase.

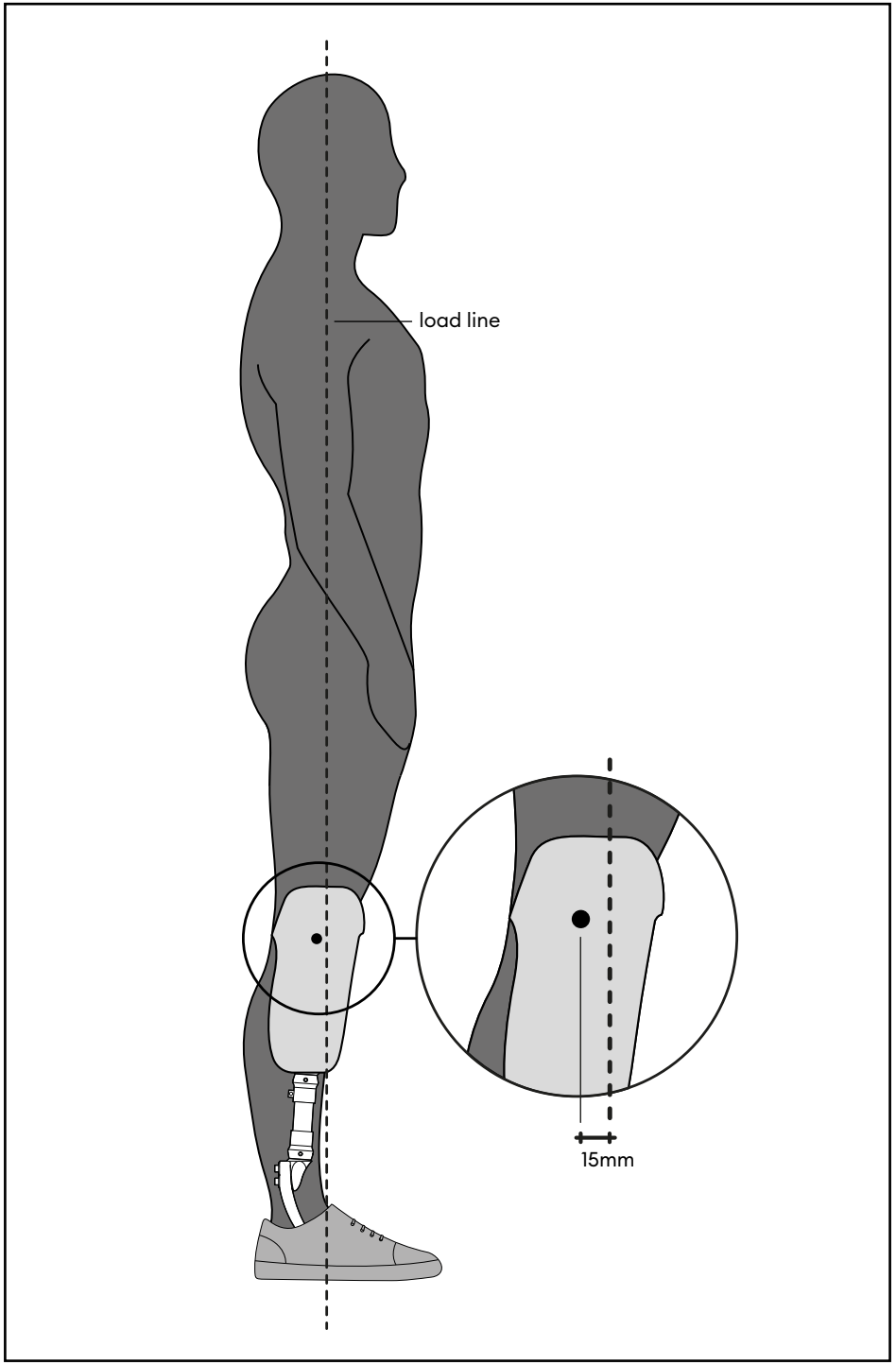

5 Cover

5.1 How to add and adjust the cover

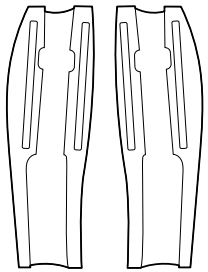

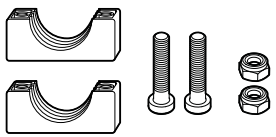

CC1-TF-SM-KIT
CC1-TF-ML-KIT
CC1-TT-KIT

Tools needed

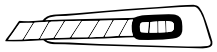

Cutter

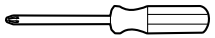

Screw driver
cross-head PZ3

1 Cut the cover to have a 10mm gap between the foot and cover.

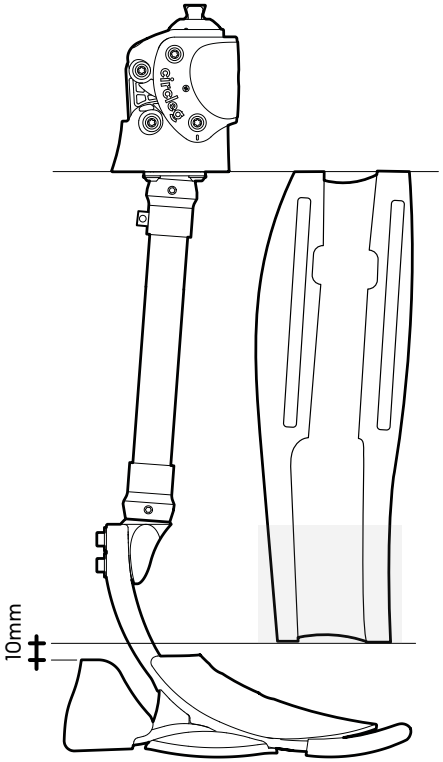

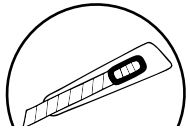

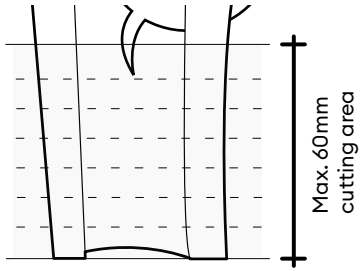

2 Mount the bracket 60mm below the prosthetic knee.

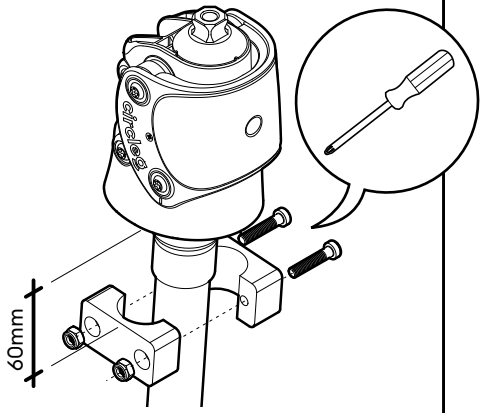

3 Apply a few dots of glue* to the inside of the cover and click the two halves together.

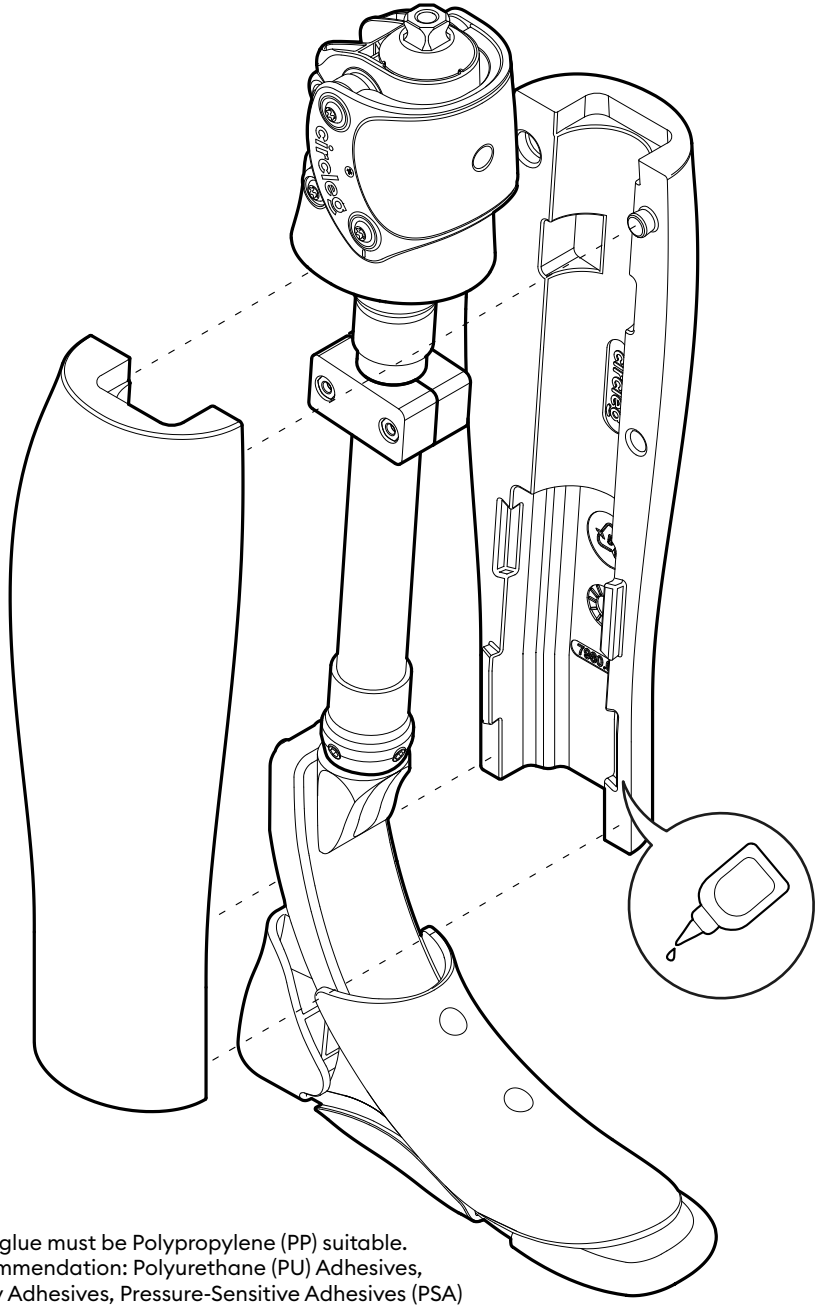

* The glue must be Polypropylene (PP) suitable.
Recommendation: Polyurethane (PU) Adhesives, Epoxy Adhesives, Pressure-Sensitive Adhesives (PSA)

4

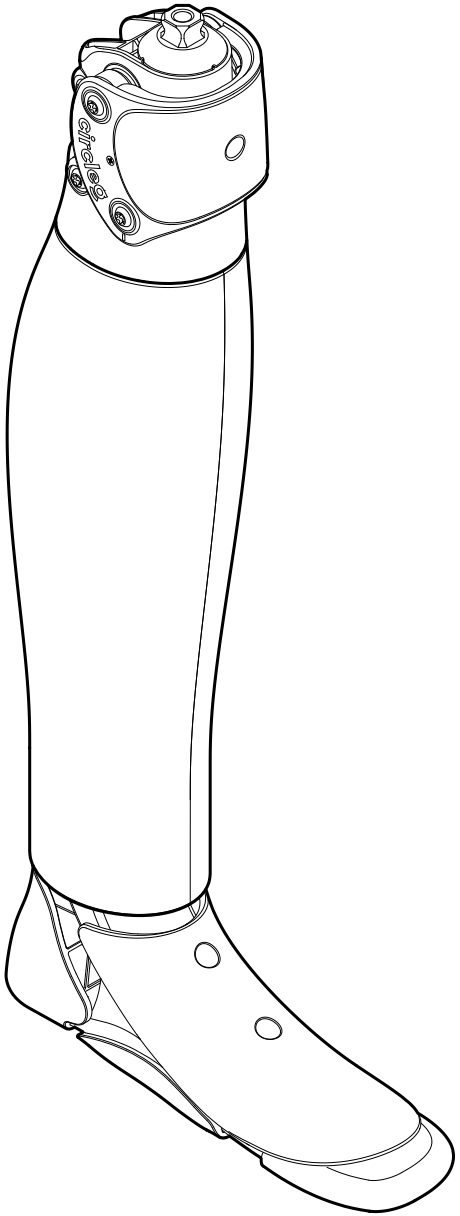

6 Maintenance

The Circleg components are designed for low maintenance. It is recommended to visually inspect the component after the initial 30 days of use, and subsequently at intervals of every 6 months. This proactive approach helps to identify and prevent any signs of unusual wear or potential issues that may arise over time. Scheduling of regular maintenance lies within the discretion of the service provider. The prosthetic user shall discontinue use and report to the service provider in the event of any breakage, failure, change in function, or any unusual wear.

6.1 Cleaning and care

Clean the Circleg components with fresh water and a microfiber cloth only. Dry with a soft towel thoroughly and allow the component to air dry to remove any remaining moisture. Repeat this procedure regularly - especially after exposure to substances other than fresh water. Avoid strong acids or any other chemical cleaning agents (pH=4 or less) on the component. These substances can be harmful and may cause damage to the Circleg components.

7 Product complaints

In the event of any serious incidents related to the product, it is imperative that you promptly inform the service provider, Circleg and the relevant regulatory authority in your country. Especially if there is a noticeable deterioration in the prosthetic user's health. Your cooperation in this regard is essential to improve product safety.

8 Liability

Circleg will only accept responsibility if the product is used in strict accordance with the descriptions and instructions outlined in this document. Circleg will not be held responsible for any damages resulting from the disregard of the information contained in this document, especially in cases of improper usage or unauthorized modifications to the product.

9 Warranty

The warranty for this product is subject to Circleg's General Terms and Conditions in effect at the time of sale. Details regarding the scope, duration, and conditions of the warranty can be found in the applicable General Terms and Conditions, available upon request or on the Circleg website: www.circleg.world

10 Disposal

Prosthetic users are advised to return defective or worn-out products to their service provider. Please note that disposal of this product with regular domestic waste may not be permitted in all countries of use. Not following the disposal regulations of the responsible authorities may have a detrimental impact on health and environment.

Notes

11 Appendices

11.1 Symbols used

Manufacturer	Temperature limits
Date of manufacture	Keep away from sunlight
Importer	Humidity limits
Distributor	
Packaging unit	
Caution	
Operator’s manual; operating instructions	
Declaration of conformity according to the applicable European regulation	
SN	Serial number (SYYCW-REF-NNN-X) S - Series YY - Year CW - Calendar week REF - Catalogue number NNN - Sequential number X - Material ID (where applicable)
REF	Article number
MD	Medical device
EC REP	Local representative

Contact us in case of any assistance needed at support@circleg.world